PGC-300

Collaborative parallel grippers

DH-ROBOTICS

Gripping force(per jaw)

40~300 N

Opening/closing stroke(both sides)

60 mm

Mechanical specifications

Maximum recommended load*	6 kg
Position repeatability (both sides)	± 0.03 mm
Opening/closing time	0.8 s/0.8 s
Driving method	Rack and pinion + T-slot guidance
Weight	1.6 kg
Noise emission	< 50 dB

Electrical specifications

Communication interface	Standard: Modbus RTU (RS485), Digital I/O Optional: TCP/IP, USB2.0, CAN2.0A,PROFINET,EtherCAT
Nominal voltage	24 V DC ± 10%
Nominal current	0.4 A
Peak current	2 A
Ingress protection rating	IP 67
Recommended operating environmen	0~40°C, 85% RH under

*It depends on the shape of the grasping object, the material and friction of the contact surface, and the acceleration of the motion,If you have any questions, please consult us.

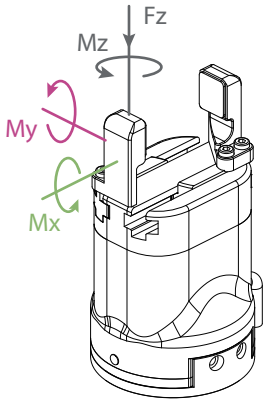

Allowable vertical load (static)	
Fz:	600 N
Allowable vertical load (static)	
Mx:	15 N·m
My:	15 N·m
Mz:	15 N·m

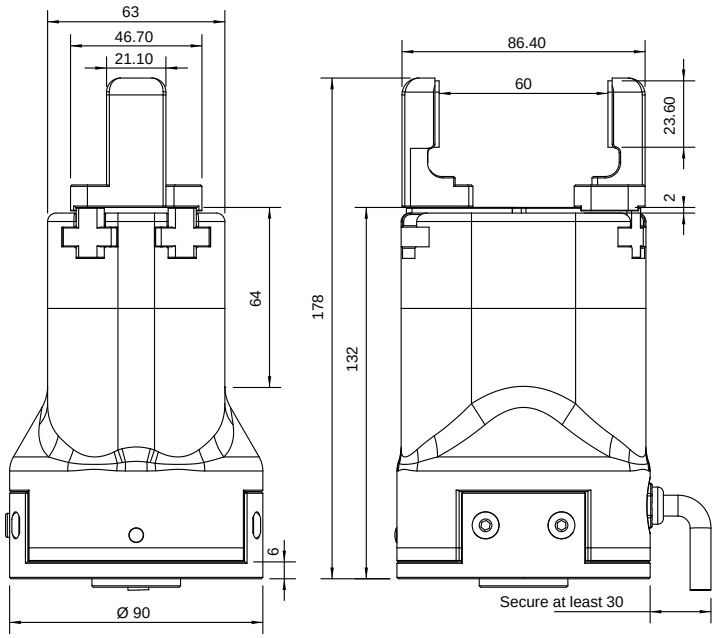

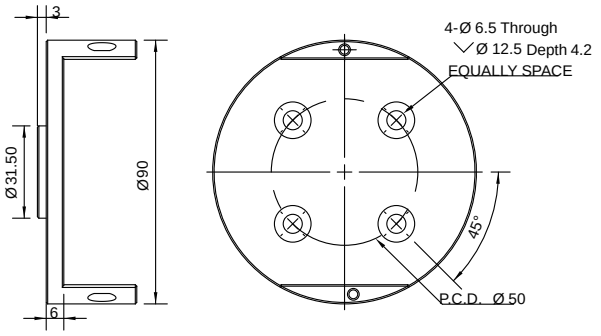

Conform to ISO 9409-1-50-4-M6 Standard flange

*If you need to customize the flange, it is recommended to design according to the robot installation hole position, or contact us

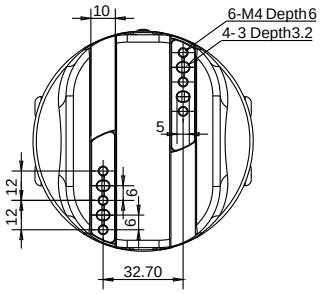

Rail mounting holes

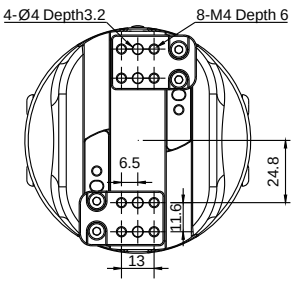

Custom finger mounting size

*If you need to customize the finger, it is recommended to design according to the size of the finger mounting plate, or contact us